Western Products, PO Box 245038, Milwaukee, WI 53224-9538 • www.westernplows.com

October 1, 2026
Lit. No. 79557, Rev. 13

# PRO PLUS® HD Snowplow

## Blades 76920 & 32355
## Center Assembly 76900, 76900-3, 76900-4
## 76910(CH), 76910-3(CH), 76910-4(CH)

## Parts List

A DIVISION OF DOUGLAS DYNAMICS, LLC

# TABLE OF CONTENTS

**PRO PLUS® HD BLADES 76920 & 32355 COMPONENTS** ..... 4
Blade Components ..... 4
**PRO PLUS® HD CENTER ASSEMBLY 76900, 76900-3, 76900-4, 76910(CH), 76910-3(CH), 76910-4(CH)** ..... 6
Lift Frame and A-Frame Components ..... 6
Hydraulic Unit Components ..... 8
Lift and Angle Ram Components ..... 10
Hoses and Fittings ..... 10
Electrical Components ..... 11
Vehicle-Side Harness Diagram – 3-Port, 2-Plug System ..... 12
Vehicle-Side Harness Diagram – Central Hydraulics ..... 13
Headlamp Kits ..... 14–15

## Blade Components

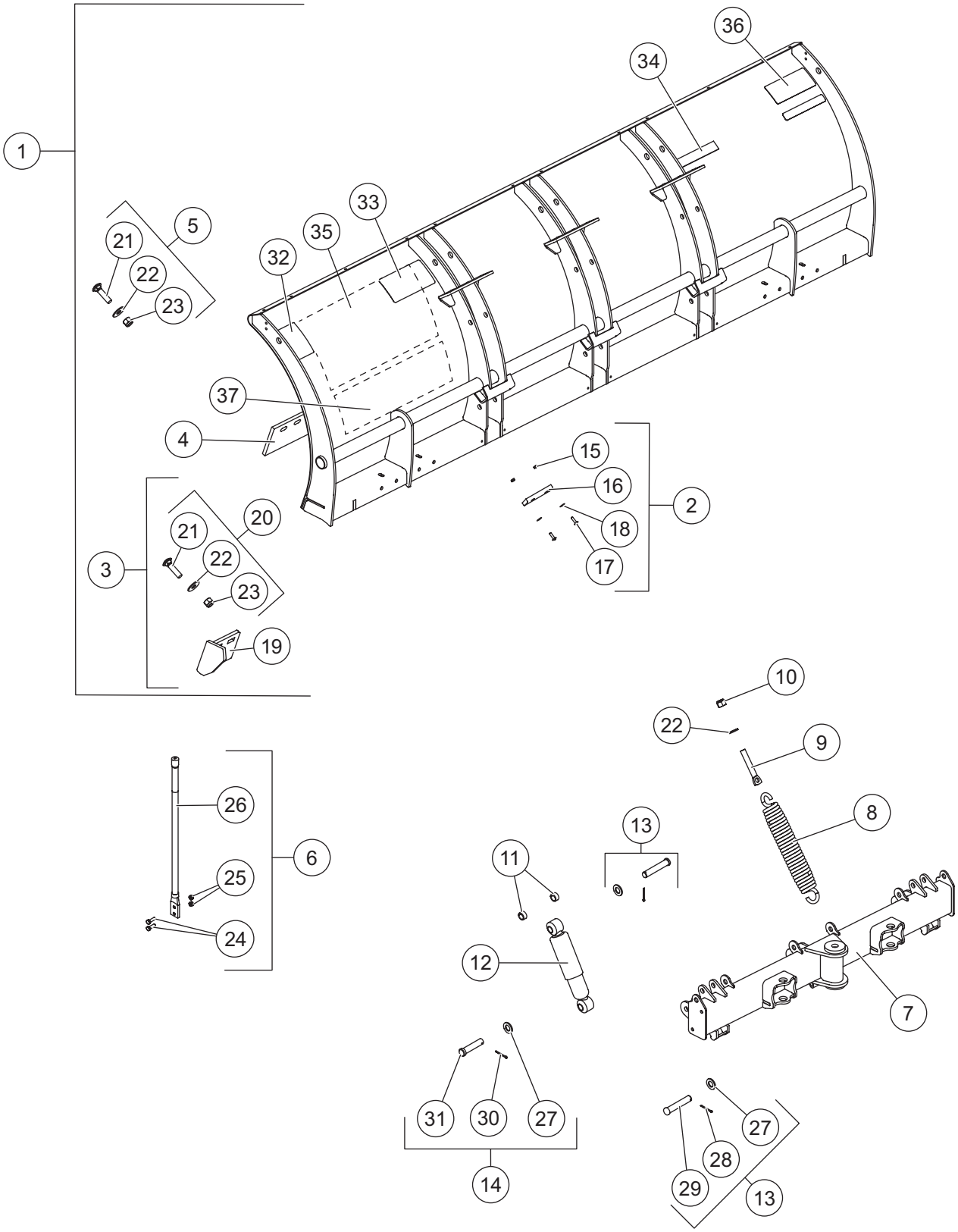

| PRO PLUS HD Blade Components | | | | | | | |
|---|---|---|---|---|---|---|---|
| **Item** | **Part** | **Qty** | **Description** | **Item** | **Part** | **Qty** | **Description** |
| 1 | 72602 | 1 | 10' Blade Assembly | ns | 85451 | 1 | Label Kit – UltraMount® 2 PRO PLUS HD Blade |
| ns | 32369 | 1 | 9' Blade Assembly | ns | 96917* | 1 | Blade Stop Kit |
| 2 | 63977 | 6 | Trip Stop Kit | ns | 84506-1* | 1 | Shoe Kit |
| 3 | 80295 | 1 | PRO PLUS HD Curb Guard Kit | ns | 79238* | 1 | High Wear Shoe Kit |
| 4 | 63990 | 1 | Cutting Edge Kit (1/2), 10' (incl. item 5) | ns | 57425-1* | 1 | 10" Rubber Deflector Kit |
| ns | 87105 | | Complete Cutting Edge Kit (1/2), 9' (incl. item 3 and item 5) | ns | 57409-1* | 1 | 18" Rubber Deflector Kit |
| | | | | ns | 44404* | 1 | Cast Curb Guard Kit (single) |
| 5 | 29351 | 1 | Bolt Bag, Cutting Edge | ns | 44406* | 1 | Cast Curb Guard Kit (set of 2) |
| 6 | 62595 | 2 | Blade Guide Kit | ns | 87110* | 1 | Complete Cutting Edge Kit (5/8), 9' (incl. item 3 and item 5) |
| 7 | 74533 | 1 | Quadrant | | | | |
| 8 | 23039 | 6 | Trip Spring | ns | 87115* | 1 | Complete Carbide Cutting Edge Kit, 9' (incl. item 3 and item 5) |
| 9 | 90490 | 6 | 5/8-11 x 4 Eyebolt | | | | |
| 10 | 91416 | 6 | 5/8-11 Hex Nut G5 | ns | 79922* | 1 | Cutting Edge Kit (5/8), 10' (incl. item 5) |
| 11 | 63211 | 4 | Spacer .758 ID x 1 OD x .5 LG | | | | |
| 12 | 63979 | 2 | Shock Absorber | ns | 74961* | 1 | Carbide Cutting Edges, 10' (incl. item 5) |
| 13 | 83235 | 5 | 3/4 x 4-3/8 Clevis Pin Kit | | | | |
| 14 | 83236 | 2 | 3/4 x 3-1/4 Clevis Pin Kit | | | | |
| **Item 2** | | | **63977 Trip Stop Kit** | | | | |
| 15 | | 2 | 1/4-20 Hex Locknut G5 | 17 | | 2 | 1/4-20 x 1-1/4 Hex Cap Screw G5 |
| 16 | | 1 | Bumper | 18 | | 2 | 1/4 Flat Washer |
| **Item 3** | | | **80295 PRO PLUS HD Curb Guard Kit** | | | | |
| 19 | 86663 | 1 | Curb Guard – DS | 20 | 80298 | 1 | Bolt Bag, Curb Guard |
| ns | 86664 | 1 | Curb Guard – PS | | | | |
| **Item 5** | | | **29351 Bolt Bag, Cutting Edge** | | | | |
| 21 | | 10 | 5/8-11 x 2-1/2 Carriage Bolt G5 | 23 | | 10 | 5/8-11 Hex Locknut GB |
| 22 | | 10 | 5/8 Hardened Flat Washer | | | | |
| **Item 6** | | | **62595 Blade Guide Kit** | | | | |
| 24 | | 4 | 5/16-18 x 1 Hex Cap Screw G5 | 26 | 62578 | 2 | Blade Guide, Poly 24" w/Label |
| 25 | | 4 | 5/16-18 Hex Locknut GB | | | | |
| **Item 13** | | | **83235 3/4 x 4-3/8 Clevis Pin Kit** | | | | |
| 27 | | 1 | 3/4 Flat Washer | 29 | | 1 | 3/4 x 4-3/8 Clevis Pin |
| 28 | | 1 | 5/32 x 1-1/2 Cotter Pin Kit | | | | |
| **Item 14** | | | **83236 3/4 x 3-1/4 Clevis Pin Kit** | | | | |
| 27 | | 1 | 3/4 Flat Washer | 31 | | 1 | 3/4 x 3-1/4 Clevis Pin |
| 30 | | 1 | 5/32 x 1-1/4 Cotter Pin | | | | |
| **Item 20** | | | **80298 Bolt Bag, Cutting Edge/Curb Guard** | | | | |
| 21 | | 4 | 5/8-11 x 2-1/2 Carriage Bolt G5 | 23 | | 4 | 5/8-11 Hex Locknut GB |
| 22 | | 4 | 5/8 Hardened Flat Washer | | | | |
| **85451 Label Kit – UltraMount 2 PRO PLUS HD Blade** | | | | | | | |
| 32 | 59900 | 1 | Label – Warning/Caution, Snowplows | 35 | 40986 | 1 | Label – Logo, CONTRACTOR GRADE® |
| 33 | 43360 | 1 | Label – Attach/Detach, UltraMount 2 | 36 | 44451 | 1 | Label – Logo, WESTERN® 8.31" |
| 34 | 28404 | 1 | Label – Logo, ULTRAFINISH™ | 37 | 92977 | 1 | Label – Logo, PRO PLUS HD |
| | | | ns = not shown | | | | G = Grade |

* Accessory only.

## Lift Frame and A-Frame Components

† Not used for central hydraulics.

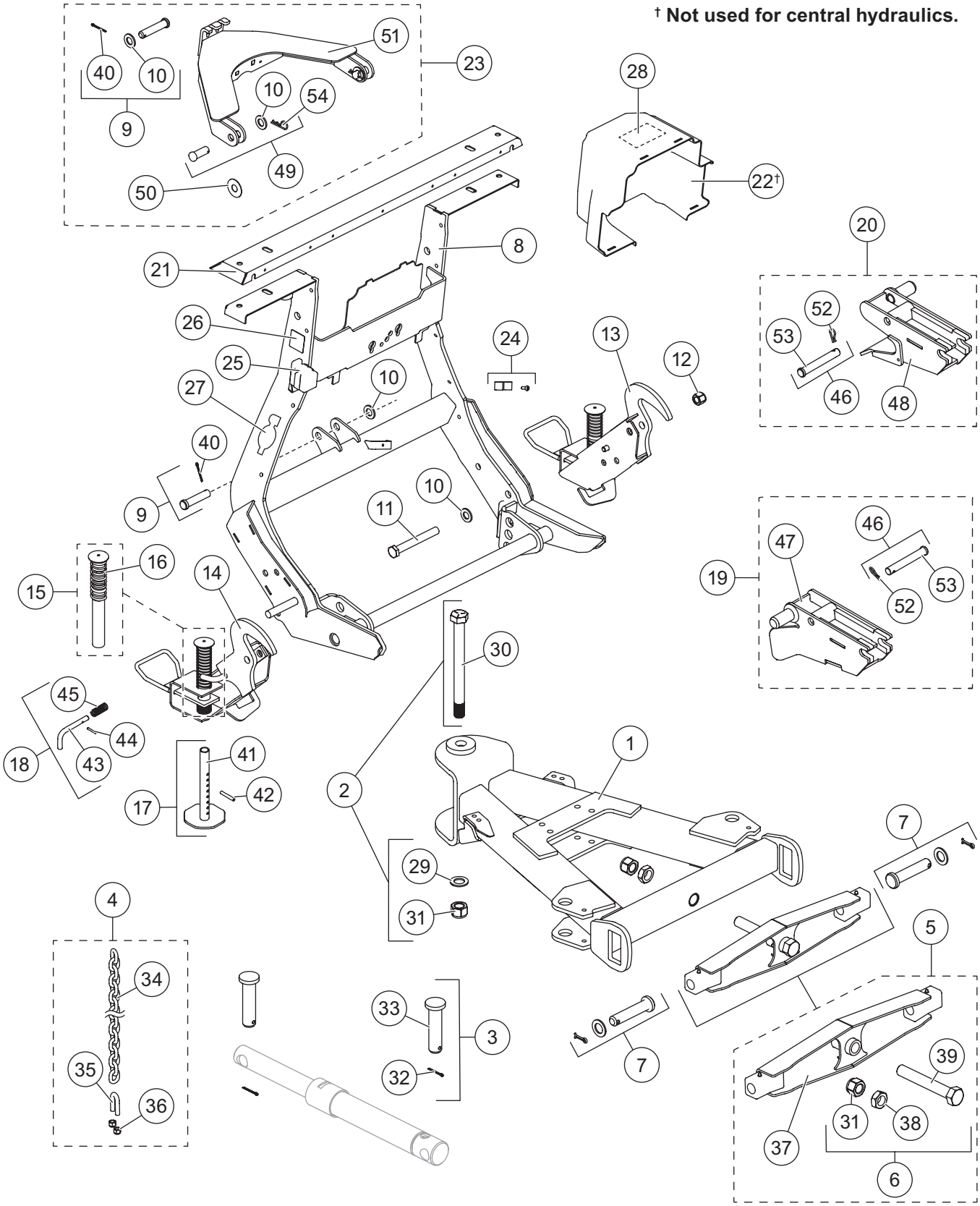

| PRO PLUS HD Lift Frame and A-Frame Components | | | | | | | |
|---|---|---|---|---|---|---|---|
| **Item** | **Part** | **Qty** | **Description** | **Item** | **Part** | **Qty** | **Description** |
| 1 | 77280 | 1 | A-Frame | 16 | 67636 | 2 | Spring Lock Stand |
| 2 | 87760 | 1 | Pivot Bolt Kit – PRO PLUS HD | 17 | 67847 | 2 | Stand Shoe Kit |
| 3 | 87761 | 4 | Ram Pin Kit | 18 | 67844 | 2 | Stand Lock Pin Kit |
| 4 | 49033 | 2 | 1/4 Grade 43 Chain Assembly | 19 | 96294 | 1 | Receiver Kit, PRO PLUS HD – DS |
| 5 | 67842-1 | 1 | Pivot Bar Kit | 20 | 96295 | 1 | Receiver Kit, PRO PLUS HD – PS |
| 6 | 67855 | 1 | Pivot Bar Bolt Kit | 21 | 43302 | 1 | Light Channel |
| 7 | 49645 | 2 | Pivot Bar Pin Kit | 22† | 68314-1 | 1 | Hydraulic Unit Cover (incl. item 28) |
| 8 | 76870 | 1 | Lift Frame (incl. items 26 & 27) | 23 | 43304 | 1 | Lift Arm Kit |
| 9 | 68740 | 2 | 3/4 x 3-1/2 Clevis Pin Kit | 24 | 49479-1 | 1 | Hose Bracket Kit |
| 10 | 91147 | 2 | 3/4 Flat Washer | 25 | 61246 | 1 | Cable Boot |
| 11 | 66451 | 2 | 3/4-10 x 6 Hex Cap Screw G5 | 26 | 69689 | 1 | Label – Logo, SECURITY GUARD™ |
| 12 | 91338 | 2 | 3/4-10 Hex Locknut GB | 27 | 43358 | 2 | Label – Logo, UltraMount® 2 |
| 13 | 92125 | 1 | Stand Assembly, PRO PLUS HD – PS | 28 | 43353 | 1 | Label – Hydraulic Information, Straight Blade |
| 14 | 92124 | 1 | Stand Assembly, PRO PLUS HD – DS | | | | |
| 15 | 48523 | 2 | Plunger w/Spring | | | | |
| **Item 2** | | | **87760 Pivot Bolt Kit – PRO PLUS HD** | | | | |
| 29 | 91192 | 1 | Round Flat Washer, Special | 31 | 91340 | 1 | 1-8 Hex Locknut GB |
| 30 | 11753 | 1 | 1-8 x 11-1/4 Hex Cap Screw G8 | | | | |
| **Item 3** | | | **87761 Ram Pin Kit** | | | | |
| 32 | 90013 | 1 | 1/4 x 2 Cotter Pin | 33 | 20790 | 1 | 1-1/4 x 5 Commercial Cylinder Pin |
| **Item 4** | | | **49033 1/4 Grade 43 Chain Assembly** | | | | |
| 34 | | 1 | 1/4 x 42 Grade 43 Chain | 36 | 91333 | 2 | 3/8-16 Hex Locknut GB |
| 35 | 90453 | 1 | 3/8-16 x 1-1/2 U-Bolt G5 | | | | |
| **Item 5** | | | **67842-1 Pivot Bar Kit** | | | | |
| 6 | 67855 | 1 | Pivot Bar Bolt Kit | 37 | | 1 | Pivot Bar |
| **Item 6** | | | **67855 Pivot Bar Bolt Kit** | | | | |
| 31 | 91340 | 1 | 1-8 Hex Locknut GB | 39 | 67552 | 1 | 1-8 x 7 Hex Cap Screw G5 |
| 38 | 67748 | 1 | 1-8 Hex Jam Nut G5 | | | | |
| **Item 9** | | | **68740 3/4 x 3-1/2 Clevis Pin Kit** | | | | |
| 10 | 91147 | 1 | 3/4 Flat Washer | 40 | 91911 | 1 | 5/32 x 1-1/2 Cotter Pin |
| **Item 17** | | | **67847 Stand Shoe Kit** | | | | |
| 41 | | 1 | Stand Shoe | 42 | 67635 | 1 | 1/4 x 2 Roll Pin |
| **Item 18** | | | **67844 Stand Lock Pin Kit** | | | | |
| 43 | | 1 | Lock Pin | 45 | 67726 | 1 | Spring Lock Pin, Stand |
| 44 | 67700 | 1 | 3/16 x 1-1/4 Roll Pin | | | | |
| **Item 19** | | | **96294 Receiver Kit, PRO PLUS HD – DS** | | | | |
| 46 | 84611 | 1 | Receiver Pin Kit | 47 | | 1 | Receiver, PRO PLUS HD – DS |
| **Item 20** | | | **96295 Receiver Kit, PRO PLUS HD – PS** | | | | |
| 46 | 84611 | 1 | Receiver Pin Kit | 48 | | 1 | Receiver, PRO PLUS HD – PS |
| **Item 23** | | | **43304 Lift Arm Kit** | | | | |
| 9 | 68740 | 1 | 3/4 x 3-1/2 Clevis Pin Kit | 50 | | 2 | UHMW Round Flat Washer, Special |
| 49 | 43351 | 2 | 3/4 x 2 Clevis Pin Kit | 51 | | 1 | Lift Arm |
| **Item 46** | | | **84611 Receiver Pin Kit** | | | | |
| 52 | 42142 | 1 | R-Pin Cotter | 53 | 95739 | 1 | 3/4 x 5 Clevis Pin HT |
| **Item 49** | | | **43351 3/4 x 2 Clevis Pin Kit** | | | | |
| 10 | 91147 | 1 | 3/4 Flat Washer | 54 | 91962 | 1 | 1/8 Hairpin Cotter |
| ns = not shown | | | G = Grade | | | | HT = Heat Treated |

† Not used for central hydraulics.

## Hydraulic Unit Components

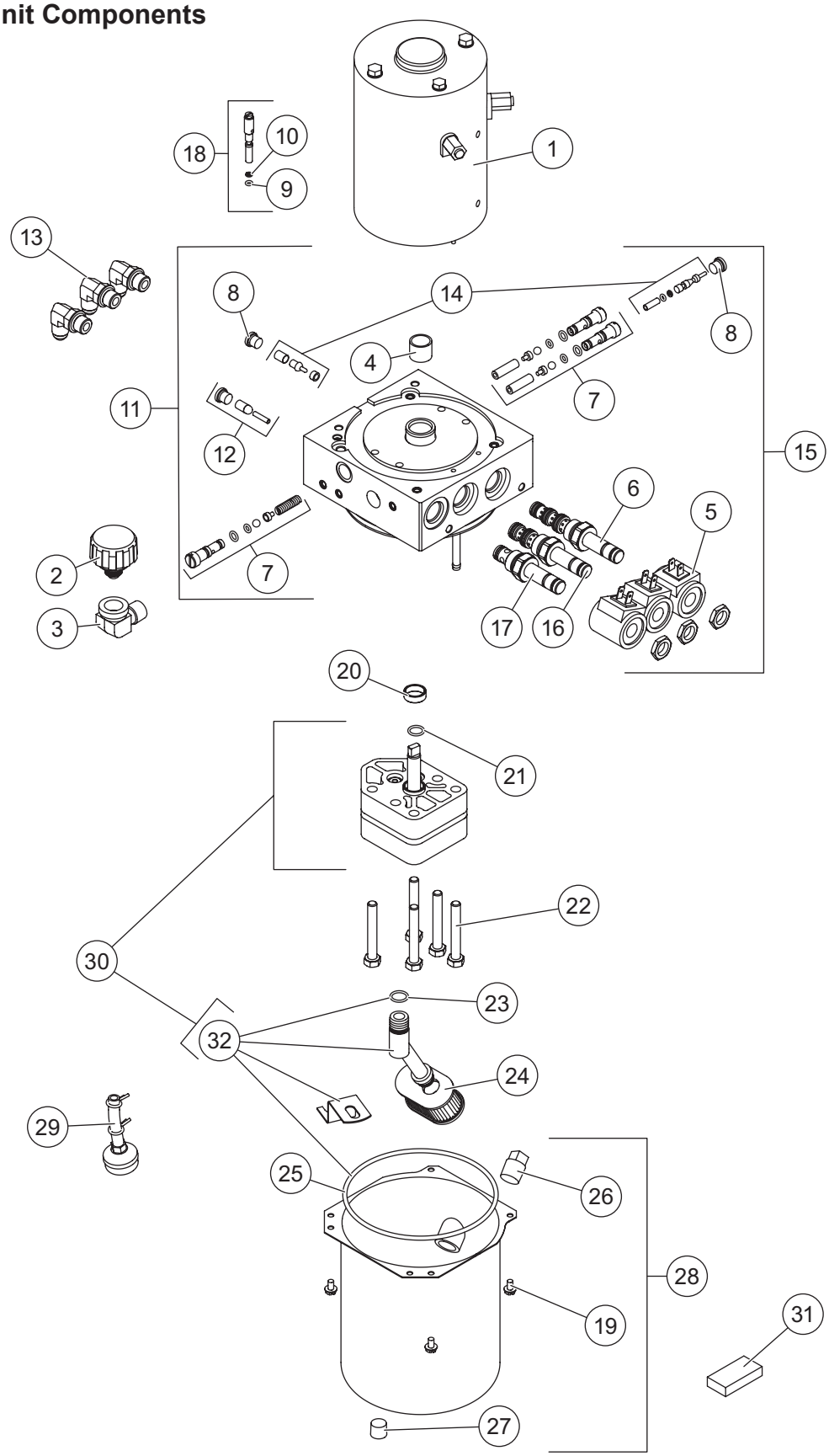

**72354 Hydraulic Unit**
**72355* Hydraulic Unit Service Kit**
(not used for central hydraulics)

| Item | Part | Qty | Description | Item | Part | Qty | Description |
|---|---|---|---|---|---|---|---|
| 1 | 21500-1 | 1 | Motor, 4-1/2 | 17 | 49227K-2 | 1 | Valve, 2-Way w/Nut |
| 2 | 21727-2K | 1 | Breather Pressure Control | 18 | 56662 | 1 | Quill Assembly |
| 3 | 21726K | 1 | Elbow, Street 90° 3/8 M NPTF/ 3/8 F NPTF | 19 | 66607 | 4 | #10-24 x 5/16 Slotted Hex Washer-Head Machine Screw |
| 4† | 64596-1 | 1 | Sleeve Bearing & Shaft Seal Kit | 20‡ | 66515 | 1 | Pump Shaft Seal |
| 5 | 49230K-2 | 3 | Coil w/Spades | 21 | 56274 | 1 | O-Ring -013 |
| 6 | 49229K-1 | 1 | Cartridge Valve, 4-Way w/Nut | 22 | 90073 | 5 | 5/16-18 x 2-1/4 Hex Cap Screw |
| 7 | 49138K-5 | 1 | Relief Valve Kit (2 sets) | 23 | 56416 | 1 | O-Ring -014 |
| 8 | 92960 | 2 | Plug, Hex Socket –3 M ORB | 24 | 56789-5 | 1 | Suction Filter |
| 9 | 25622 | 1 | O-Ring -006 | 25 | 66519 | 1 | O-Ring 2-250 |
| 10 | 56315 | 1 | Back-Up O-Ring -006 | 26 | 92079 | 1 | Plug, Square 3/8 NPTF |
| 11 | 42346-2 | 1 | Manifold Assembly | 27 | 92095 | 1 | Plug, Hex Socket 1/4 NPTF w/Thread Sealant – SAE 130109N/P |
| 12 | 56507 | 1 | Bypass Check Valve Kit | | | | |
| 13 | 77929 | 3 | Elbow, 90° –6 M JIC/–6 M ORB w/Screen | 28 | 21830 | 1 | Reservoir Kit |
| | | | | 29 | 66405 | 1 | Return Screen Assembly |
| 14 | 49226K | 1 | Poppet Check Valve Kit | 30 | 21501-1 | 1 | Hydraulic Pump Kit |
| 15 | 42347-2 | 1 | Valve Manifold Assembly | 31 | 73897 | 1 | Magnet |
| 16 | 66608-1 | 1 | Cartridge Valve, 3-Way w/Nut | 32 | 66763-1 | 1 | Inlet Fitting/Filter Kit |
| **O-Ring Service Kits** | | | | | | | |
| – | 56657-6 | – | O-Ring & Back-Up Ring Kit | – | 49259-2 | – | Seal Kit, 3-Way & 4-Way Valve |
| – | 49258-2 | – | Seal Kit, 2-Way Valve | | | | |
| F = Female | | | | M = Male | | | |

* Includes 72354 hydraulic unit and plow-side electrical components (p. 11).

† Use 64589 tool for bearing sleeve replacement (includes 1 bearing).

‡ Use 28856 tool for pump shaft seal replacement (includes 1 seal).

## Lift and Angle Ram Components

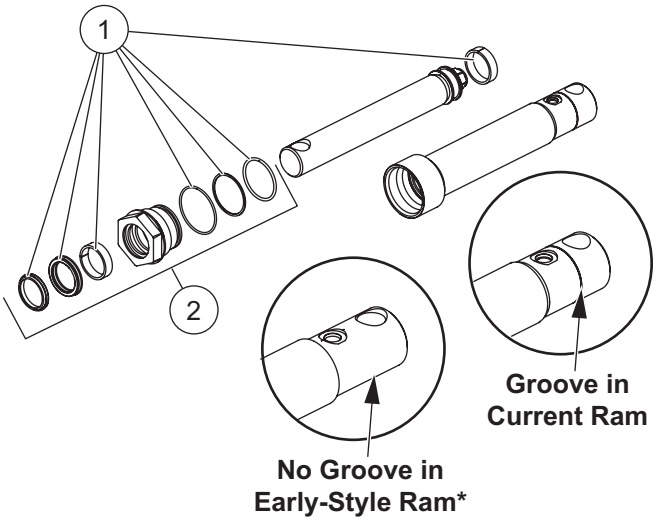


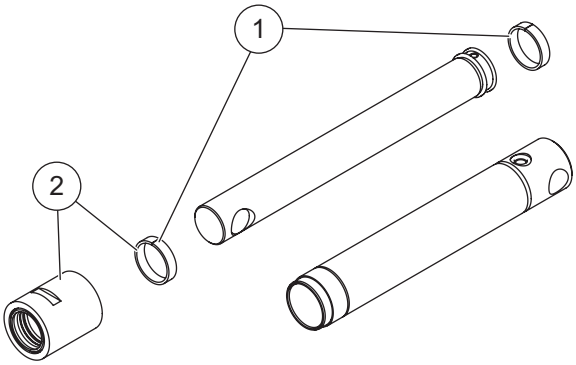


| 43149-1 Lift Ram Assembly 1-3/4 x 8 | | | |
|---|---|---|---|
| **Item** | **Part** | **Qty** | **Description** |
| 1 | 77924 | 1 | Seal Kit |
| 2 | 43135 | 1 | Gland Nut Assembly |

* Old-style lift rams are obsolete and should be replaced with current-style lift ram.

| 72620 Angle Ram Assembly 2 x 12-1/2 | | | |
|---|---|---|---|
| **Item** | **Part** | **Qty** | **Description** |
| 1 | 51427 | 2 | Wear Ring |
| 2 | 57125 | 1 | Gland Nut Assembly |

Angle ram accessory: 72392 Gland Nut Wrench Kit

## Hoses and Fittings

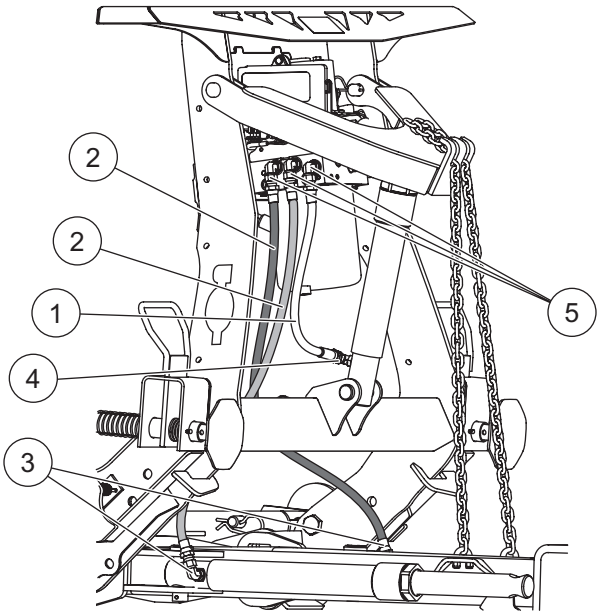


| Hoses and Fittings | | | | | | | |
|---|---|---|---|---|---|---|---|
| **Item** | **Part** | **Qty** | **Description** | **Item** | **Part** | **Qty** | **Description** |
| 1† | 41094 | 1 | Hose, 1/4 x 18 w/F JIC Ends | 4 | 49526 | 1 | Connector, Short –6 M JIC/–6 M ORB |
| 2† | 49496 | 2 | Hose, 3/8 x 42 w/F JIC Ends | 5 | 77929 | 3 | Elbow, 90° –6 M JIC/–6 M ORB w/Screen |
| 3 | 56615-1 | 2‡ | Elbow, 90° –6 M JIC/–6 M ORB | | | | |
| F = Female | | | | M = Male | | | |

† Not used for central hydraulics.

‡ Qty 2 for central hydraulics applications.

## Electrical Components

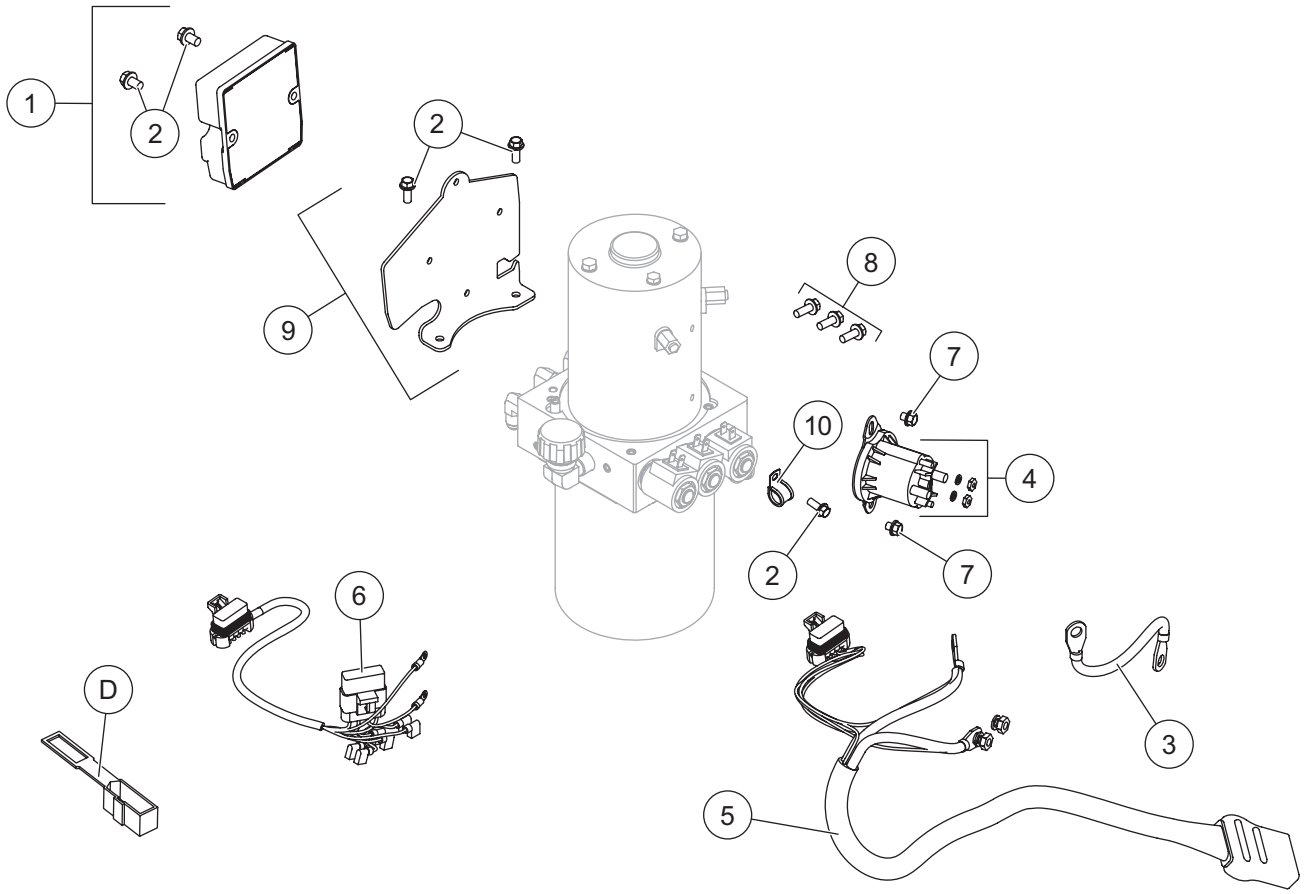


| Plow-Side Electrical Components | | | | | | | |
|---|---|---|---|---|---|---|---|
| **Item** | **Part** | **Qty** | **Description** | **Item** | **Part** | **Qty** | **Description** |
| 1 | 49567 | 1 | Plow Module, 2-Port | 7 | 29099 | 2 | 1/4-20 x 1/4 Hex Washer-Head Thread-Rolling Screw |
| 2 | 44355 | 5 | 1/4-20 x 5/8 Hex Washer-Head Thread-Rolling Screw | 8 | 72384 | 3 | 3/8-16 x 1 Serrated Flange Hex Cap Screw |
| 3 | 29071 | 1 | Cable Assembly 8" | | | | |
| 4 | 42902 | 1 | Motor Relay Kit FLEET FLEX System | 9 | 42287 | 1 | Bracket – Plow Module |
| 5 | 42015 | 1 | Snowplow Battery Cable | 10 | 65340 | 1 | Clamp Loop #10 |
| 6 | 28581-1 | 1 | Harness Plow Control, 3-Solenoid | ns | 56099 | 1 | Dielectric Grease |
| ns = not shown | | | | | | | |

| Vehicle-Side Electrical Components (diagrams on following pages) | | | | | | | |
|---|---|---|---|---|---|---|---|
| A*† | 28587 | 1 | Vehicle Control Harness | E | 29998 | 1 | Fuse Cover (pkg of 5) |
| B*† | 42014 | 1 | Vehicle Battery Cable | F†‡ | 90730 | 1 | 200A Fuse Kit |
| C‡ | 26498 | 1 | Vehicle Control Harness – Central Hydraulics | ns | 11766 | 1 | Truck-Side Electrical Kit, FLEET FLEX System (incl. items A, B, D) |
| D | 61548K | 1 | Plug Cover Kit (shown with plow-side electrical components) | | | | |
| ns = not shown | | | | | | | |

* Not used for central hydraulics.

† For diagram, see Vehicle-Side Harness Diagram – 3-Port, 2-Plug System.

‡ For diagram, see Vehicle-Side Harness Diagram – Central Hydraulics.

## Vehicle-Side Harness Diagram – 3-Port, 2-Plug System

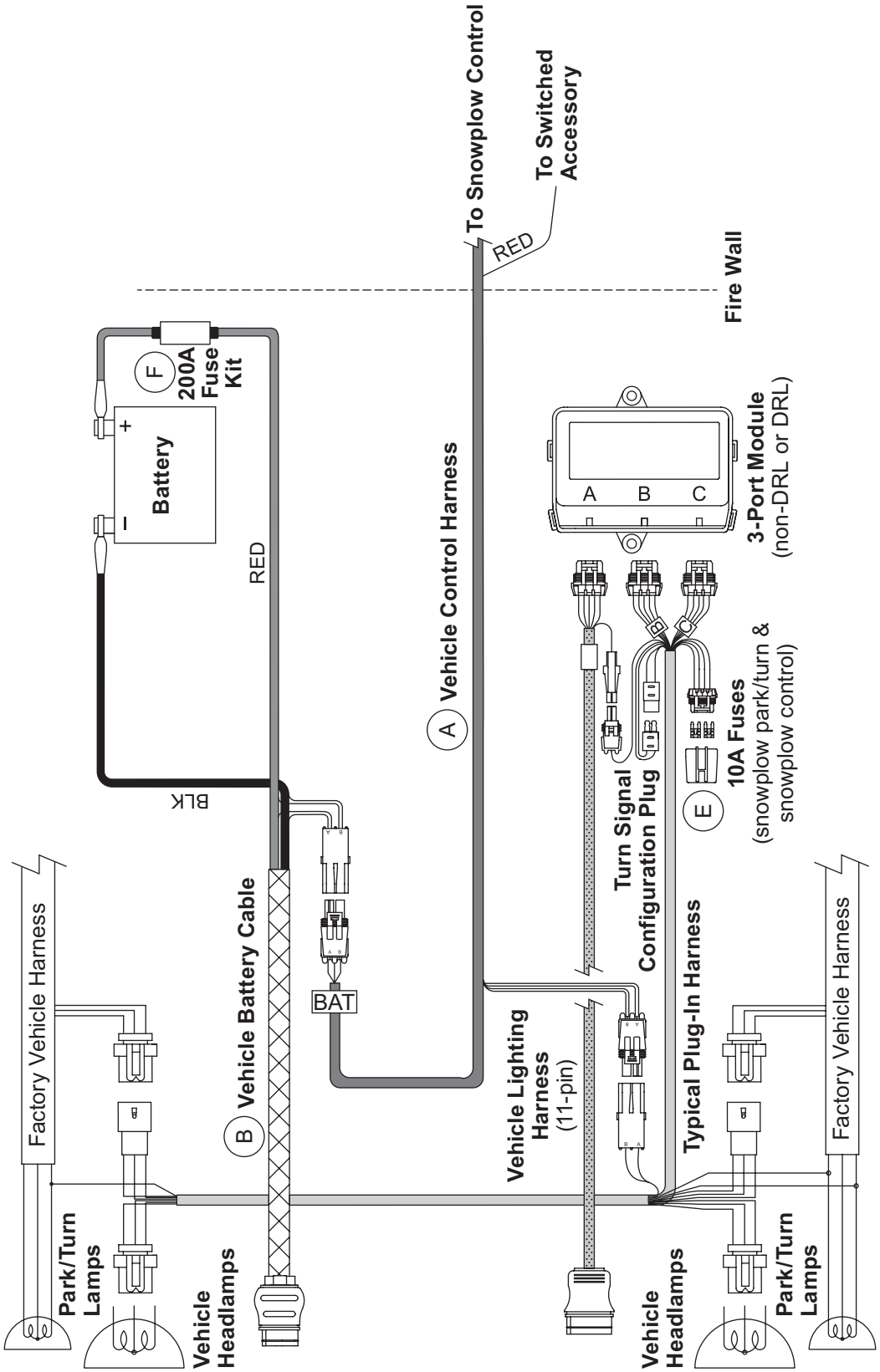

## Vehicle-Side Harness Diagram – Central Hydraulics

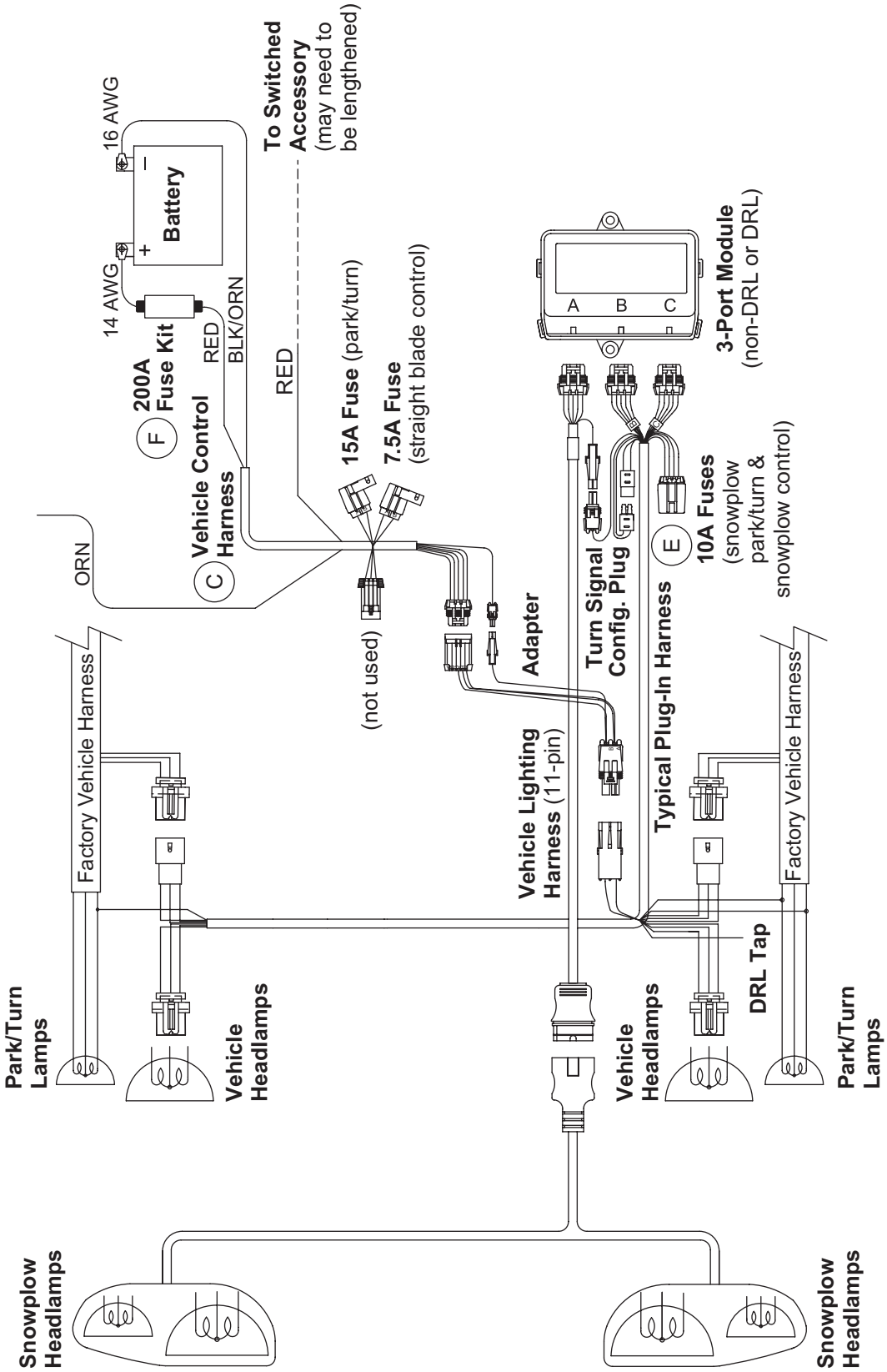

## Headlamp Kit – Halogen

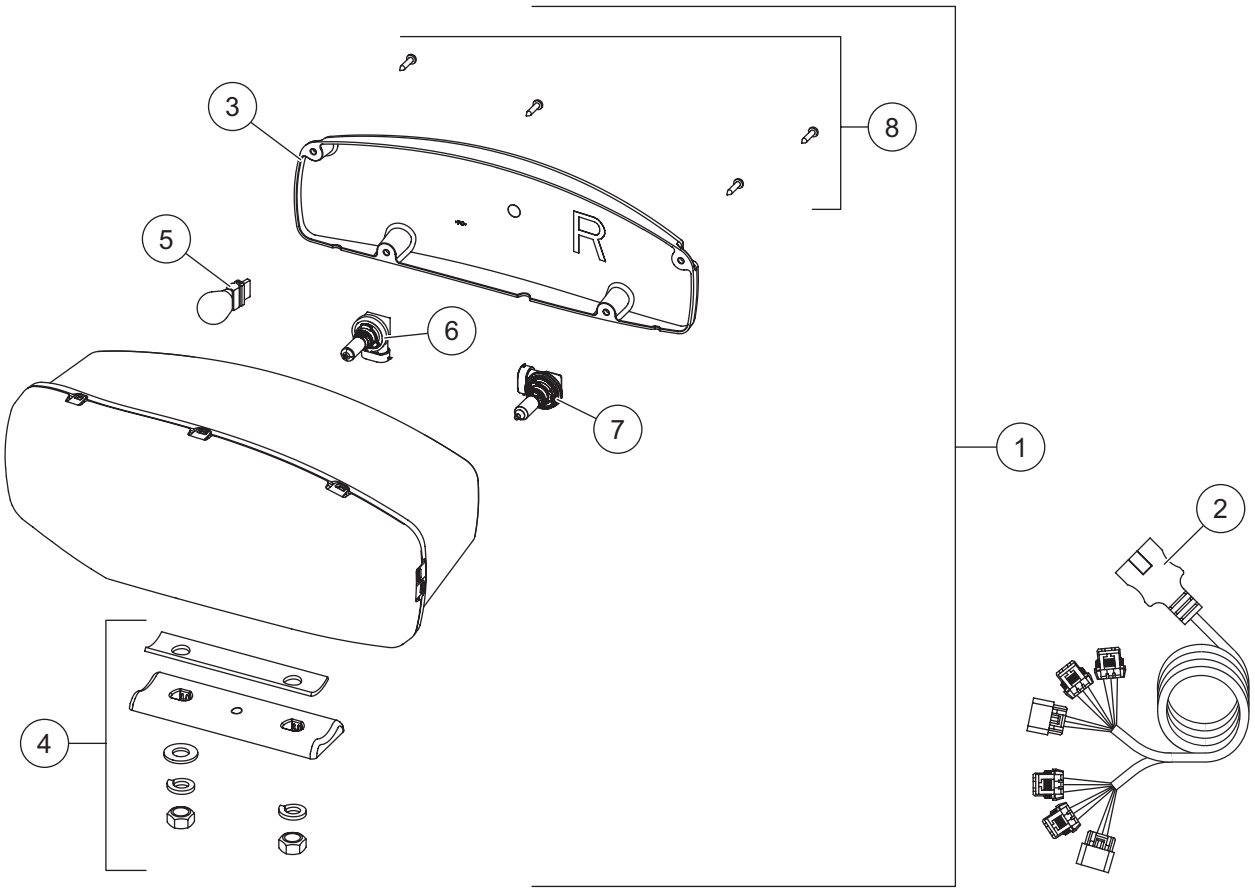


| 38800 Headlamp Kit H9/H11 (pair) | | | | | | | |
|---|---|---|---|---|---|---|---|
| **Item** | **Part** | **Qty** | **Description** | **Item** | **Part** | **Qty** | **Description** |
| 1 | 38802 | 1 | Headlamp Service Kit H9/H11 – PS | 2 | 38807 | 1 | Harness Service Kit H9/H11 |
| ns | 38801 | 1 | Headlamp Service Kit H9/H11 – DS | | | | |
| **Item 1** | | | **38801/38802 Headlamp Service Kit H9/H11 – PS/DS** | | | | |
| 3 | 38803 | 1 | Rear Cover Kit H9/H11 – PS | 6 | 38811 | 1 | Headlamp Bulb Service Kit H11 |
| ns | 38812 | 1 | Rear Cover Kit H9/H11 – DS | 7 | 38809 | 1 | Headlamp Bulb Service Kit H9 |
| 4 | 38804 | 1 | Mounting Hardware Kit H9/H11 | 8 | 38808 | 1 | Cover Screws Service Kit H9/H11 (pkg of 4) |
| 5 | | 1 | Park/Turn Bulb (trade no. 4157NAK) | | | | |
| ns = not shown | | | | | | | |

## Headlamp Kit – LED

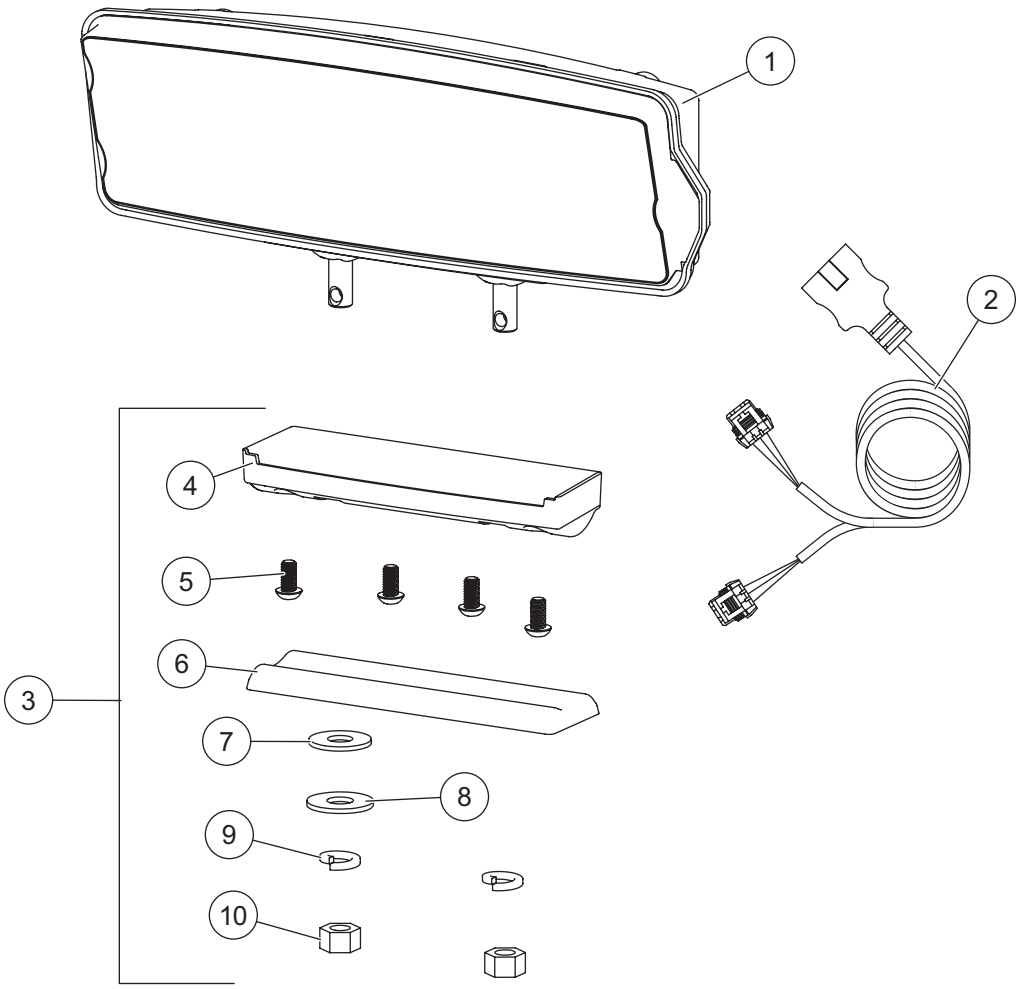


| Headlamp Kit LED | | | | | | | |
|---|---|---|---|---|---|---|---|
| **Item** | **Part** | **Qty** | **Description** | **Item** | **Part** | **Qty** | **Description** |
| 1 | 39901 | 1 | Headlamp Service Kit LED – DS | 3 | 39903 | 1 | Mounting Hardware Kit LED |
| ns | 39902 | 1 | Headlamp Service Kit LED – PS | ns | 72512 | 1 | LED Harness Connector Cover (pkg of 2) |
| 2 | 72548 | 1 | Harness Service Kit LED | | | | |
| **Item 3** | | | **39903 Mounting Hardware Kit LED** | | | | |
| 4 | | 1 | Plastic Casing | 8 | | 1 | 1/2 Flat Washer |
| 5 | | 4 | 1/4 Button Cap Screw | 9 | | 2 | 1/2 Lock Washer |
| 6 | | 1 | Headlamp Swivel | 10 | | 2 | 1/2 Hex Nut |
| 7 | | 1 | 1/2 Rubber Washer | ns | | 1 | Metal Insert |
| ns = not shown | | | | | | | |

Western Products
PO Box 245038
Milwaukee, WI 53224-9538
*www.westernplows.com*

**A DIVISION OF DOUGLAS DYNAMICS, LLC**

Copyright © 2026 Douglas Dynamics, LLC. All rights reserved. This material may not be used, reproduced, or copied in any manner, in whole or in part, in any printed, mechanical, electronic, film, or other distribution and storage media, nor analyzed or manipulated in any manner for the purpose of training artificial intelligence technologies or systems, without the written consent of Western Products. In accordance with Article 4(3) of the Digital Single Market Directive 2019/790, Western Products expressly reserves this work from the text and data mining exception. Authorization to photocopy items for internal or personal use by Western Products outlets or equipment owner is granted.

Western Products reserves the right under its product improvement policy to change construction or design details and furnish equipment when so altered without reference to illustrations or specifications used. Western Products or the vehicle manufacturer may require or recommend optional equipment for snow removal. Do not exceed vehicle ratings with a snowplow. Western Products offers a limited warranty for all equipment and accessories. See separately printed page for this important information. The following are registered (®) or unregistered (™) trademarks of Douglas Dynamics, LLC: CONTRACTOR GRADE®, PRO PLUS® HD, SECURITY GUARD™, ULTRAFINISH™, UltraMount® 2, WESTERN®.

**Printed in U.S.A.**